THE INFORMATION CONTAINED IN THIS DRAWING IS THE SOLE PROPERTY OF NATIONAL PRODUCTS INC. ANY REPRODUCTION IN PART OR WHOLE WITHOUT THE WRITTEN PERMISSION OF NATIONAL PRODUCTS INC. IS PROHIBITED.

REVISIONS			
REV.	DESCRIPTION	DATE	APPROVED

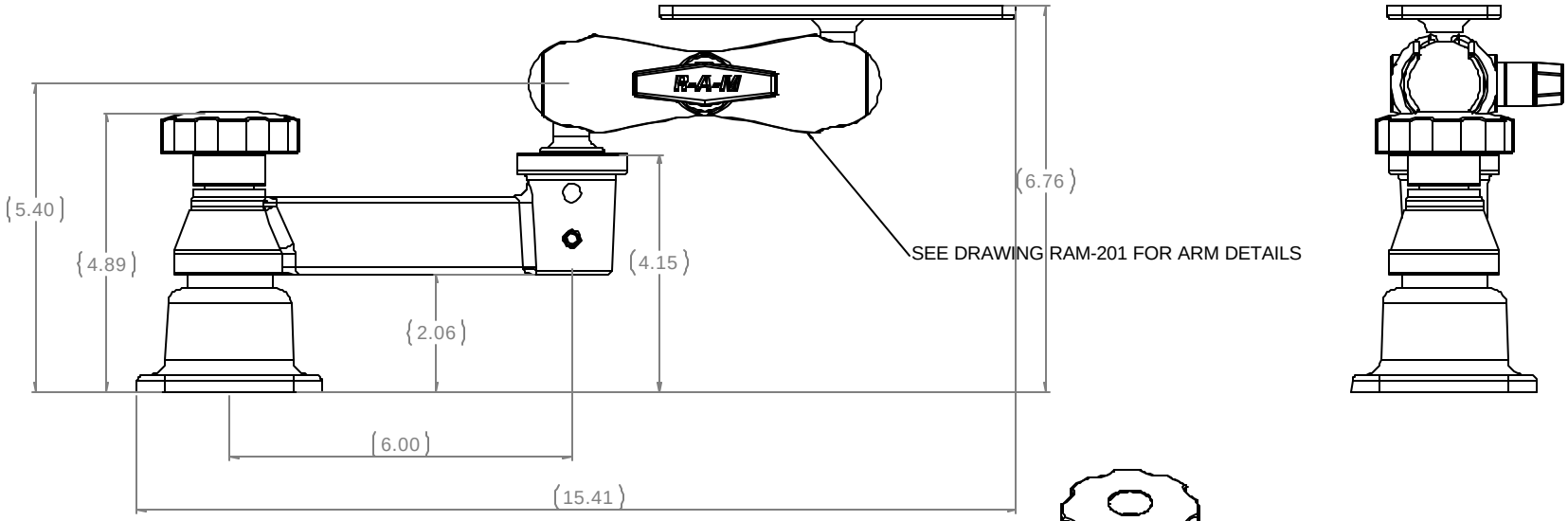

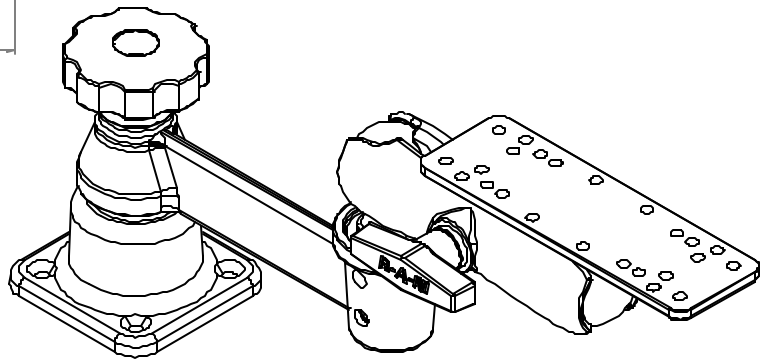

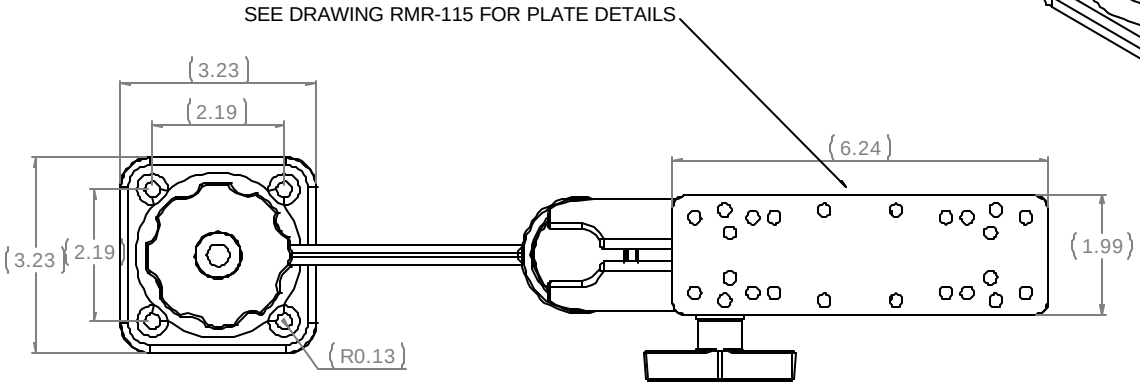

UNLESS OTHERWISE SPECIFIED DIMENSIONS ARE IN INCHES TOLERANCES ARE: FRACTIONS ± 1/32 DECIMALS .XX± .06 .XXX± .030 ANGLES ± 1 DEG.	CAD GENERATED DRAWING. DO NOT MANUALLY UPDATE	NATIONAL PRODUCTS INC.
MATERIAL ALUMINUM	APPROVALS / DATE — DRAWN JDC 01/19/01 — CHECKED CMR 04/19/01 — RESP ENG — MFG ENG — QUAL ENG	RAM HORIZONTAL BASE WITH 6" SWING ARM, DBL. SOCKET ARM & 2" X 6 1/4" PLATE WITH 1.5" DIA. RUBBER BALL
FINISH BLACK POWDER COAT		SIZE D — DWG. NO. RAM-109H-2 — REV.
DO NOT SCALE DRAWING		SCALE 1 TO 1 — CAD FILE RAM109H2 — SHEET 1 OF 1