THE INFORMATION CONTAINED IN THIS DRAWING IS THE SOLE PROPERTY OF NATIONAL PRODUCTS INC. ANY REPRODUCTION IN PART OR WHOLE WITHOUT THE WRITTEN PERMISSION OF NATIONAL PRODUCTS INC. IS PROHIBITED.

REVISIONS

REV.	DESCRIPTION	DATE	APPROVED

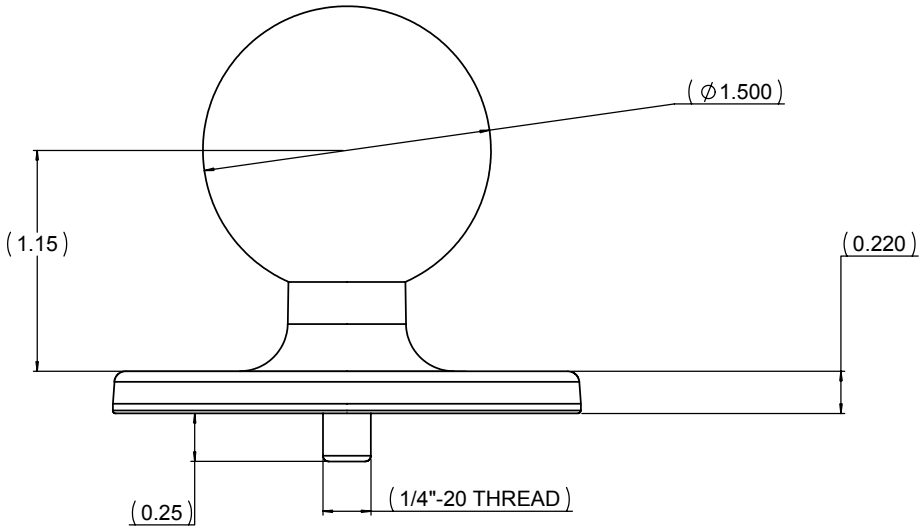

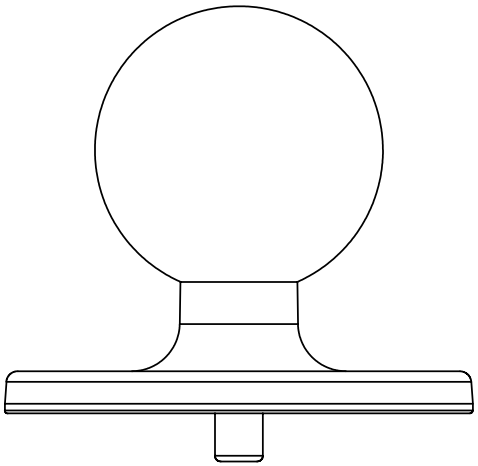

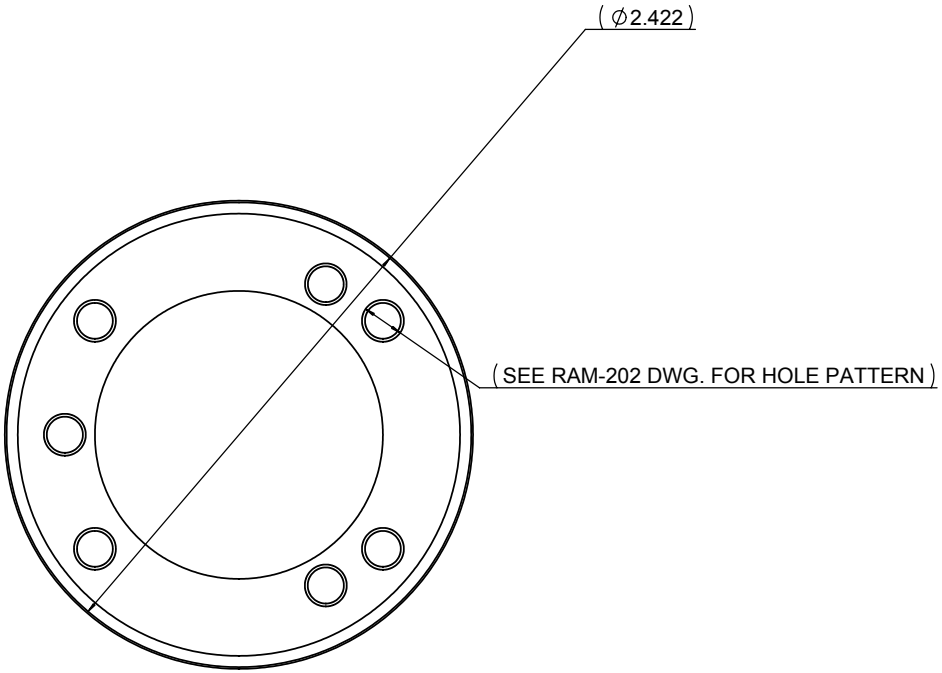

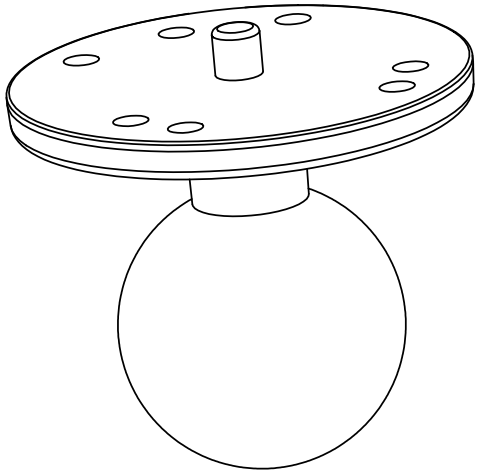

UNLESS OTHERWISE SPECIFIED DIMENSIONS ARE IN INCHES
TOLERANCES ARE:
FRACTIONS DECIMALS ANGLES
+ - 1/32 .XX+ -.06 + - 1 DEG.
.XXX+ - .030

MATERIAL: ALUMINUM

FINISH: BLACK POWDER COAT

DO NOT SCALE DRAWING

CAD GENERATED DRAWING. DO NOT MANUALLY UPDATE

APPROVALS		DATE
DRAWN	JDC	04/08/02
CHECKED	CMR	04/08/02
RESP ENG		
MFG ENG		
QUAL ENG		

NATIONAL PRODUCTS INC.

RAM 2.43" DIA. BASE WITH 1/4"-20 STST STUD & 1.5" DIA. RUBBER BALL

SIZE C | DWG. NO. RAM-202A | REV.

SCALE 1 TO 1 | CAD FILE: RAM202A | SHEET 1 OF 1