THE INFORMATION CONTAINED IN THIS DRAWING IS THE SOLE PROPERTY OF NATIONAL PRODUCTS INC. ANY REPRODUCTION IN PART OR WHOLE WITHOUT THE WRITTEN PERMISSION OF NATIONAL PRODUCTS INC. IS PROHIBITED.

REVISIONS

| REV. | DESCRIPTION | DATE | APPROVED |
|---|---|---|---|
| | | | |

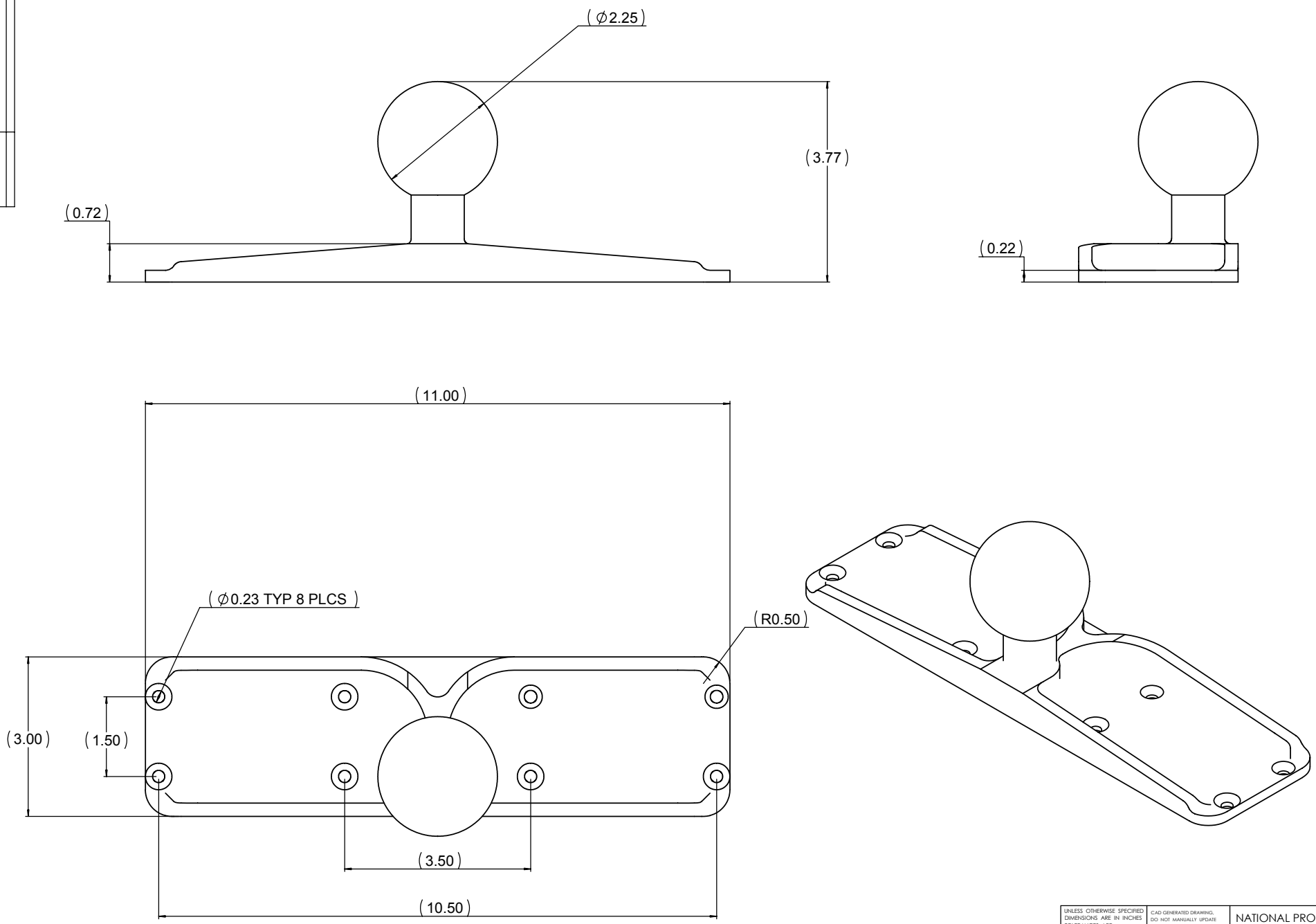


UNLESS OTHERWISE SPECIFIED DIMENSIONS ARE IN INCHES
TOLERANCES ARE:
FRACTIONS DECIMALS ANGLES
+ - 1/32 .XX+ -.06 + - 1 DEG.
.XXX+ - .030

MATERIAL: ALUMINUM

FINISH: BLACK POWDER COAT

DO NOT SCALE DRAWING

CAD GENERATED DRAWING. DO NOT MANUALLY UPDATE

| APPROVALS | | DATE |
|---|---|---|
| DRAWN | JDC | 04/20/01 |
| CHECKED | CMR | 04/20/01 |
| RESP ENG | | |
| MFG ENG | | |
| QUAL ENG | | |

NATIONAL PRODUCTS INC.

RAM 3" X 11" BASE WITH 2 1/4" DIA. RUBBER BALL

SIZE C | DWG. NO. RAM-D-111B | REV.

SCALE 1 TO 1 | CAD FILE: RAMD111B | SHEET 1 OF 1